finder
RELAYING INNOVATION

SMART Energy meters

7M
SERIES

- Panels for electrical distribution
- Control panels
- Electrical energy control
- Industrial robots
- Inverter
- Charging Stations
- PV applications

Prices, features, specifications, capabilities, appearance and availability of our products and services are subject to change without notice.
FINDER assumes no responsibility for the presence of possible errors or insufficient information in this document.
In case of discrepancies between the printed and online versions, the latter prevails.

Single-phase energy meter with backlit LCD display

Type 7M.24.8.230.0001
S0 pulse output
kWh energy meter

- Display of active energy consumption (kWh)
- Active power accuracy Class B according to EN 50470-3
- S0 pulse output for remote energy monitoring according to EN 62053-31
- Sealable tamperproof terminal shield
- Protection category II
- 35 mm rail (EN 60715) mount

NEW **7M.24.8.230.0001**

- Reference current 5 A (40 A Maximum)
- S0 pulse output
- 1-phase 230 V AC
- kWh

7M.24.8.230.0001
Box clamp

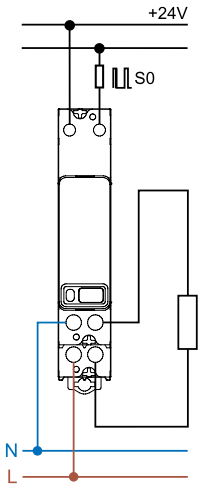

For outline drawing see page 14

Specification		
Reference/Maximum current I_n/I_{max}	A	5/40
Starting current I_{st}	A	0.02
Minimum measured current I_{min}	A	0.25
Current range (within accuracy class)	A	0.5…40
Maximum peak current	A	1200 (10 ms)
Supply (& monitored) voltage U_N	V AC	230
Operating range		$(0.8…1.15)U_N$
Frequency	Hz	50/60
Power consumption	W/VA	≤ 0.5/1.5
Display		LCD
Max. totalising count/Min. increment	kWh	999 999.9/0.1
LED pulses per kWh		1000
LED pulse length	ms	4±0.5
Output specification (S0+/S0–)		
Number/Type		1 opto-isolated output
Voltage range/Maximum current (conforming to EN 62053-1)	V DC/mA	3.3…27/1…27
Pulses per kWh	Imp/kWh	1000
Pulse length	ms	32 ± 2
Maximum cable length	m	1000
Technical data		
Accuracy class EN 50470-3 (MID)		B
Ambient temperature (Within accuracy class)	°C	–25…+55
Protective class		II
Protection category: Housing/terminals		IP 50/IP 20
Approvals (according to type)		CE UKCA

Single-phase Bi-directional energy meters with backlit LCD display
Multi-function and MID certified

Type 7M.24.8.230.0010
S0 pulse output

Type 7M.24.8.230.0110 (with NFC)
S0 pulse output, IR communication port
NFC technology allows to program and customize the counters via smartphone and also reading the measured energy even in the absence of mains voltage

- Display of total or partial (resettable) consumption: kWh, kVAh, kvarh
- 2 active energy MID counters + 2 reactive energy nationally certified counters
- 8 resettable counters
- Scroll to view the following instantaneous values: V, A, PF, kW, kVA, kvar, Hz, THD V, THD A, phase angle and direction of power flow
- 7 digit backlit LCD display
- Multi-function touch button
- Active energy accuracy Class B according to EN 50470-3 (MID)
- Reactive energy accuracy Class 2 to EN 62053-23
- S0 pulse output for remote energy monitoring according to EN 62053-31
- Sealable tamperproof terminal shield
- Protection category II
- 35 mm rail (EN 60715) mount

7M.24.8.230.0xxx
Box clamp

For outline drawing see page 14

E

NEW 7M.24.8.230.0010

- Reference current 5 A (40 A Maximum)
- S0 pulse output
- 1-phase 230 V 50/60 Hz
- MID certified

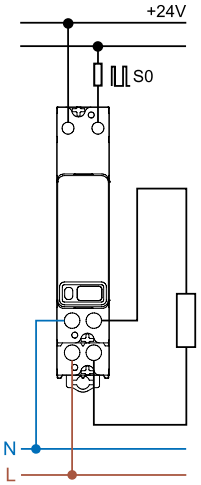

NEW 7M.24.8.230.0110

- Reference current 5 A (40 A Maximum)
- S0 pulse output, IR communication port and NFC
- 1-phase 230 V 50/60 Hz
- MID certified

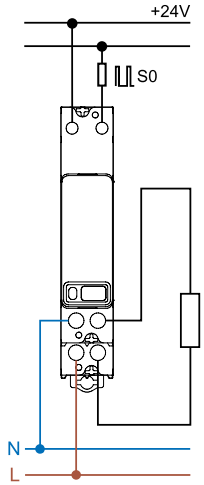

Specification			
Reference/Maximum current I_n/I_{max}	A	5/40	5/40
Starting current I_{st}	A	0.02	0.02
Minimum measured current I_{min}	A	0.25	0.25
Current range (within accuracy class)	A	0.5…40	0.5…40
Maximum peak current	A	1200 (10 ms)	1200 (10 ms)
Supply (& monitored) voltage U_N	V AC	230	230
Operating range		(0.8…1.15)U_N	(0.8…1.15)U_N
Frequency	Hz	50/60	50/60
Power consumption	W/VA	≤ 0.5/1.5	≤ 0.5/1.5
Display		LCD	LCD
Max. totalising count/Min. increment	kWh	999 999.9/0.1	999 999.9/0.1
LED pulses per kWh		1000	1000
LED pulse length	ms	4±0.5	4±0.5
Output specification (S0+/S0–)			
Number/Type		1 opto-isolated output	1 opto-isolated output
Voltage range/Maximum current (conforming to EN 62053-1)	V DC/mA	3.3…27/1…27	3.3…27/1…27
Pulses per kWh	Imp/kWh	1000	1000
Pulse length	ms	32 ± 2	32 ± 2
Maximum cable length	m	1000	1000
Technical data			
Accuracy class IEC EN 50470-3/IEC EN 62053-23		1/2	1/2
Ambient temperature (Within accuracy class)	°C	–25…+55	–25…+55
Protective class		II	II
Protection category: Housing/terminals		IP 50/IP 20	IP 50/IP 20
Approvals (according to type)		CE UKCA	

III-2024, www.findernet.com

Single-phase Bi-directional energy meters with NFC technology , MID certification and LCD display
IR comms port + Modbus/M-Bus interface

Type 7M.24.8.230.0210 (with NFC)
Multi-function energy meter
Bi-directional, MID certified with RS485 Modbus integrated interface

Type 7M.24.8.230.0310 (with NFC)
Multi-function energy meter
Bi-directional, MID certified with M-Bus integrated interface

NFC technology allows to program and customize the counters via smartphone and also reading the measured energy even in the absence of mains voltage

- Display of total or partial (resettable) consumption: kWh, kVAh, kvarh
- 2 active energy MID counters + 2 reactive energy nationally certified counters
- 8 resettable counters
- Scroll to view the following instantaneous values: V, A, PF, kW, kVA, kvar, Hz, THD V, THD A, phase angle and direction of power flow
- 7 digit backlit LCD display
- Multi-function touch button
- Active energy accuracy Class B according to EN 50470-3 (MID)
- Reactive energy accuracy Class 2 to EN 62053-23
- Sealable tamperproof terminal shield
- Protection category II
- 35 mm rail (EN 60715) mount

7M.24.8.230.0x10
Box clamp

* Modbus default transmission baud rate: 19200 bps
M-Bus default transmission baud rate: 2400 bps

For outline drawing see page 14

NEW **7M.24.8.230.0210**

- Reference current 5 A (40 A Maximum)
- Modbus integrated interface and IR communication port and NFC technology
- 1-phase 230 V 50/60 Hz
- MID certified

NEW **7M.24.8.230.0310**

- Reference current 5 A (40 A Maximum)
- M-Bus integrated interface and IR communication port and NFC technology
- 1-phase 230 V 50/60 Hz
- MID certified

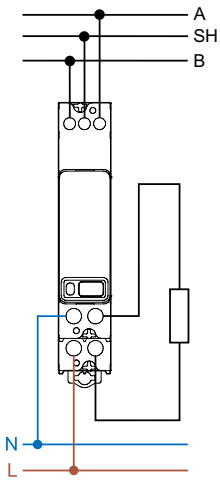

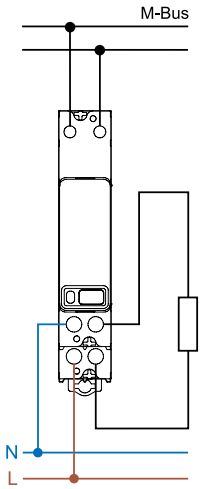

Specification			
Reference/Maximum current I_n/I_{max}	A	5/40	5/40
Starting current I_{st}	A	0.02	0.02
Minimum measured current I_{min}	A	0.25	0.25
Current range (within accuracy class)	A	0.5…40	0.5…40
Maximum peak current	A	1200 (10 ms)	1200 (10 ms)
Supply (& monitored) voltage U_N	V AC	230	230
Operating range		$(0.8…1.15)U_N$	$(0.8…1.15)U_N$
Frequency	Hz	50/60	50/60
Power consumption	W/VA	≤ 0.5/1.5	≤ 0.5/1.5
Display		LCD	LCD
Max. totalising count/Min. increment	kWh	999 999.9/0.1	999 999.9/0.1
LED pulses per kWh		1000	1000
LED pulse length	ms	4±0.5	4±0.5
Technical data communication protocol			
Bus System		Modbus RS485	M-Bus
Frame (default)		8, N, 2	—
Max bus length	m	1000	—
Baud rate*	Baud	1200…115 200	300…9600
Technical data			
Accuracy class IEC EN 50470-3/IEC EN 62053-23		1/2	1/2
Ambient temperature (Within accuracy class)	°C	–25…+70	–25…+55
Protective class		II	II
Protection category: Housing/terminals		IP 50/IP 20	IP 50/IP 20
Approvals (according to type)		CE UK CA	

Three-phase multi-function Bi-directional energy meters with NFC technology and backlit Matrix LCD display. MID certified for 3 or 4 wire system and single phase application up to 80 A @ 70°C.

Type 7M.38.8.400.0112 (with NFC)
Direct connection up to 80 A, dual tariff, two S0 pulse output
NFC technology allows to program and customize the counters via smartphone and also reading the measured energy even in the absence of mains voltage

- Display of total or partial (resettable) consumption: kWh, kVAh, kvarh
- 2 active energy MID counters + 2 reactive energy nationally certified counters
- 16 resettable counters
- Scroll to view the following instantaneous values: V, A, PF, kW, kVA, kvar, Hz, THD V, THD A, phase angle and direction of power flow
- Two SO pulse outputs for remote energy monitoring according to EN 62053-31
- Matrix backlit LCD display
- Multi-function touch button
- Active energy accuracy Class B according to EN 50470-3 (MID)
- Reactive energy accuracy Class 2 to EN 62053-23
- Sealable tamperproof terminal shield
- Protection category II
- 35 mm rail (EN 60715) mount

E

7M.38.8.400.0112
Box clamp

For outline drawing see page 15

NEW **7M.38.8.400.0112**

- Reference current 5 A (80 A Maximum)
- Three phase system 3 or 4 wire or single phase
- Dual S0 outputs and IR communication port and NFC technology
- MID certified up to 70°C

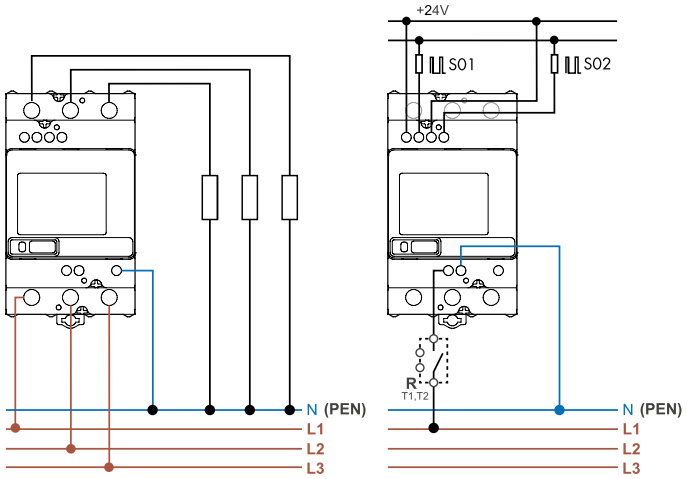

Specification		
Reference/Maximum current I_n/I_{max}	A	5/80
Starting current I_{st}	A	0.02
Minimum measured current I_{min}	A	0.25
Current range (within accuracy class)	A	0.5…80
Maximum peak current	A	2400 (10 ms)
Supply (& monitored) voltage U_N	V AC	3 x 230/400
Operating range		(0.8…1.15)U_N
Frequency	Hz	50/60
Power consumption	W/VA	≤ 1/7.5
Display		Matrix - LCD
Max. totalising count/Min. increment	kWh	999 999.9/0.1
LED pulses per kWh		1000
LED pulse length	ms	4±0.5
Output specification (S0+/S0-)		
Number/Type		2 opto-isolated outputs
Voltage range/Maximum current (conforming to EN 62053-1)	V DC/mA	3.3…27/1…27
Pulse per kWh	Imp/kWh	500
Pulse length	ms	32 ± 2
Maximum cable length	m	1000
Technical data		
Accuracy class IEC EN 50470-3/IEC EN 62053-23		B/2
Ambient temperature (Within accuracy class)	°C	–25…+70
Protective class		II
Protection category: Housing/terminals		IP 50/IP 20
Approvals (according to type)		CE UKCA

III-2024, www.findernet.com

Three-phase multi-function Bi-directional energy meters with NFC technology and backlit Matrix LCD display.
MID certified for 3 or 4 wire system and single phase application up to 80 A @ 70°C.

Type 7M.38.8.400.0212 (with NFC)
Direct connection up to 80 A, dual tariff
Multi-function energy meter with RS485 Modbus integrated interface and and S0 output
NFC technology allows to program and customize the counters via smartphone and also reading the measured energy even in the absence of mains voltage

- Display of total or partial (resettable) consumption: kWh, kVAh, kvarh
- 2 active energy MID counters + 2 reactive energy nationally certified counters
- 16 resettable counters
- Scroll to view the following instantaneous values: V, A, PF, kW, kVA, kvar, Hz, THD V, THD A, phase angle and direction of power flow
- RS485 Modbus integrated communications port
- S0 pulse outputs for remote energy monitoring according to EN 62053-31
- Matrix backlit LCD display
- Multi-function touch button
- Active energy accuracy Class B according to EN 50470-3 (MID)
- Reactive energy accuracy Class 2 to EN 62053-23
- Sealable tamperproof terminal shield
- Protection category II
- 35 mm rail (EN 60715) mount

* Modbus default transmission baud rate: 19 200 bps

For outline drawing see page 15

NEW **7M.38.8.400.0212**

- Reference current 5 A (80 A Maximum)
- RS485 Modbus integrated interface and IR communication port and NFC technology
- 3-phase 230/400 V 50/60 Hz system: 3L+N, 3L, 1L+N
- MID certified up to 70°C

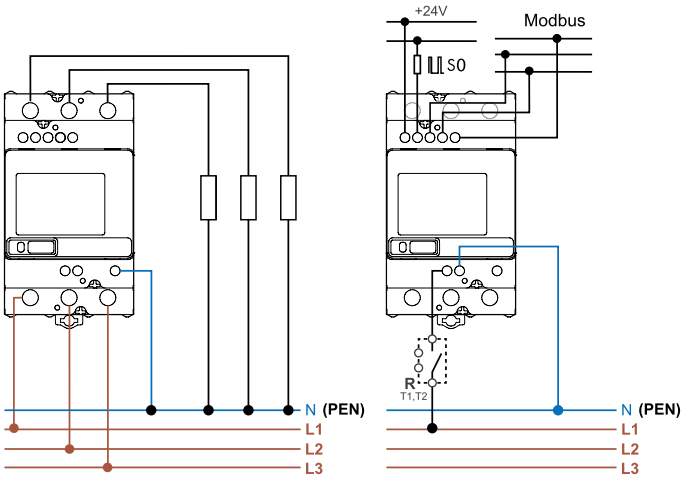

Specification		
Reference/Maximum current I_n/I_{max}	A	5/80
Starting current I_{st}	A	0.02
Minimum measured current I_{min}	A	0.25
Current range (within accuracy class)	A	0.5…80
Maximum peak current	A	2400 (10 ms)
Supply (& monitored) voltage U_N	V AC	3 x 230/400
Operating range		(0.8…1.15)U_N
Frequency	Hz	50/60
Power consumption per phase	W/VA	≤ 1/7.5
Display		Matrix - LCD
Max. totalising count/Min. increment	kWh	999 999.9/0.1
LED pulses per kWh		1000
LED pulse length	ms	4±0.5
Output specification (S0+/S0-)		
Number/Type		1 opto-isolated output
Voltage range/Maximum current (conforming to EN 62053-1)	V DC/mA	3.3…27/1…27
Pulse per kWh	Imp/kWh	500
Pulse length	ms	32 ± 2
Maximum cable length	m	1000
Modbus technical data		
Bus System		Modbus RS485
Frame (default)		8, N, 2
Max bus length	m	1000
Max. Modbus energy meters connectable		32
Baud rate*	Baud	1200…115 200
Technical data		
Accuracy class IEC EN 50470-3/IEC EN 62053-23		B/2
Ambient temperature (Within accuracy class)	°C	–25…+70
Protective class		II
Protection category: Housing/terminals		IP 50/IP 20
Approvals (according to type)		CE UK CA

Three-phase multi-function Bi-directional energy meters with NFC technology and backlit Matrix LCD display.
MID certified for 3 or 4 wire system and single phase application up to 80 A @ 70°C.

Type 7M.38.8.400.0312 (with NFC)
Direct connection up to 80 A, dual tariff, Multi-function energy meter with M-Bus integrated interface and and S0 output
NFC technology allows to program and customize the counters via smartphone and also reading the measured energy even in the absence of mains voltage

- Display of total or partial (resettable) consumption: kWh, kVAh, kvarh
- 2 active energy MID counters + 2 reactive energy nationally certified counters
- 16 resettable counters
- Scroll to view the following instantaneous values: V, A, PF, kW, kVA, kvar, Hz, THD V, THD A, phase angle and direction of power flow
- M-Bus integrated communications port
- S0 pulse outputs for remote energy monitoring according to EN 62053-31
- Matrix backlit LCD display
- Multi-function touch button
- Active energy accuracy Class B according to EN 50470-3 (MID)
- Reactive energy accuracy Class 2 to EN 62053-23
- Sealable tamperproof terminal shield
- Protection category II
- 35 mm rail (EN 60715) mount

* M-Bus default transmission baud rate: 2400 bps

For outline drawing see page 15

NEW **7M.38.8.400.0312**

- Reference current 5 A (80 A Maximum)
- M-Bus integrated interface and IR communication port and NFC technology
- 3-phase 230/400 V 50/60 Hz system: 3L+N, 3L, 1L+N
- MID certified up to 70°C

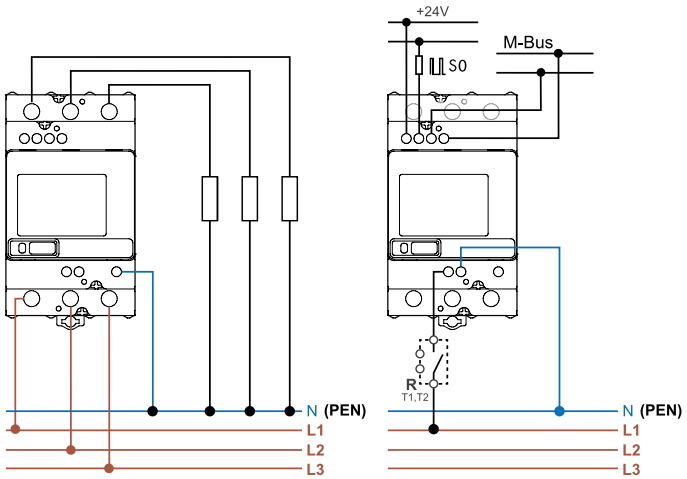

Specification		
Reference/Maximum current I_n/I_{max}	A	5/80
Starting current I_{st}	A	0.02
Minimum measured current I_{min}	A	0.25
Current range (within accuracy class)	A	0.5…80
Maximum peak current	A	2400 (10 ms)
Supply (& monitored) voltage U_N	V AC	3 x 230/400
Operating range		(0.8…1.15)U_N
Frequency	Hz	50/60
Power consumption per phase	W/VA	≤ 1/7.5
Display		Matrix - LCD
Max. totalising count/Min. increment	kWh	999 999.9/0.1
LED pulses per kWh		1000
LED pulse length	ms	4±0.5
Output specification (S0+/S0-)		
Number/Type		1 opto-isolated output
Voltage range/Maximum current (conforming to EN 62053-1)	V DC/mA	3.3…27/1…27
Pulse per kWh	Imp/kWh	500
Pulse length	ms	32 ± 2
Maximum cable length	m	1000
M-Bus technical data		
Bus System		M-Bus
Baud rate*	Baud	300…9600
Technical data		
Accuracy class IEC EN 50470-3/IEC EN 62053-23		B/2
Ambient temperature (Within accuracy class)	°C	–25…+70
Protective class		II
Protection category: Housing/terminals		IP 50/IP 20
Approvals (according to type)		CE UKCA

III-2024, www.findernet.com

Ordering information

Example: 1-phase energy meter for direct connection up to 40 A, S0 pulse output, Class B accuracy, for 35 mm rail (EN 60715) mounting, with integral sealable tamperproof terminal shield.

7 M . 2 4 . 8 . 2 3 0 . 0 0 0 1

Series

Type
2 = 1-phase, backlit display

Current
4 = 40 A

Supply version
8 = AC

Supply voltage
230 = 230 V

Special version
0 = Standard

Option
0 = S0 pulse output
1 = IR comms. port + S0 pulse output + NFC
2 = RS485 Modbus integrated interface + IR comms. port + NFC
3 = M-Bus integrated interface + IR comms. port + NFC

Version
1 = Conforms to MID directive

Special version
0 = Single tariff
1 = kWh only (0001)

Available versions
7M.24.8.230.0001
7M.24.8.230.0010
7M.24.8.230.0110
7M.24.8.230.0210
7M.24.8.230.0310

E

Example: 3-phase energy meter for direct connection up to 80 A, with MID certification, Class B accuracy, for 35 mm rail (EN 60715) mounting.

7 M . 3 8 . 8 . 4 0 0 . 0 1 1 2

Series

Function
3 = 3-phase, backlit display, direct connection

Current
8 = 80 A

Supply version
8 = AC 50/60 Hz

Supply voltage
400 = 3 x 230/400 V AC 50/60 Hz

Special version
0 = Standard

Option
1 = Infra-red comms. port + two S0 pulse outputs + NFC
2 = RS485 Modbus integrated interface + S0 pulse output + IR comm. port + NFC
3 = M-Bus integrated interface + S0 pulse output + IR comm. port + NFC

Version
1 = Conforms to MID directive

Special version
2 = Dual tariff

Available versions
7M.38.8.400.0112
7M.38.8.400.0212
7M.38.8.400.0312

Technical data

Insulation			7M.24.8.230.0xxx	7M.38.8.400.0xxxx
Insulation rated voltage		V	250	250
Insulation	between active parts and S0+/S0– terminals	kV (1.2/50 µs)	6	
	between supply and Modbus, M-Bus terminal	kV (1.2/50 µs)	6	
	between adjacent phases	kV (1.2/50 µs)	6	
Insulation	between active parts and S0+/S0– terminals	V AC	4000	
	between supply and Modbus, M-Bus terminal	V AC	4000	
Protection class			II	

EMC Specification according to EN 61000-4-(2/3/4)		7M.24.8.230.0xxx	7M.38.8.400.0xxxx
Electrostatic discharge	contact discharge	8 kV	
	air discharge	15 kV	
Radio frequency Electromagnetic field (80…2000)MHz		30 V/m	
Fast Transients (burst) (5-50 ns, 5 kHz)	on Supply terminals	4 kV	
	on S0+/S0– terminals	2 kV	
	Modbus, M-Bus terminal	2 kV	
Surge (1.2/50 µs)	on Supply terminals	4 kV	

Other data		7M.24.8.230.0xxx	7M.38.8.400.0xxxx
Pollution degree		2	
Vibration resistance		EN 60068-2-6	EN 60068-2-6
Shock resistance		EN 60068-2-27	EN 60068-2-27
Power lost to the environment	max value per phase	0.5W/1.5 VA	1W/7.5VA

Supply terminals		7M.24.8.230.0xxx		7M.38.8.400.0xxx	
Max. wire size		solid cable	stranded cable	solid cable	stranded cable
	mm²	1.5…10	1.5…10	1.5…25	1.5…25
	AWG	16…8	16…8	16…4	16…4
Screw torque for I_{max}	Nm	0.8	0.8	2	2

S0+/S0– terminals, RS485 Modbus, M-Bus		7M.24.8.230.0xxx		7M.38.8.400.0xxx	
Max. wire size		solid cable	stranded cable	solid cable	stranded cable
	mm²	0.14…2.5	0.14…2.5	0.14…2.5	0.14…2.5
	AWG	26…14	26…14	26…14	26…14
Screw torque	Nm	0.5	0.5	0.5	0.5

Wiring diagrams

Three-phase system

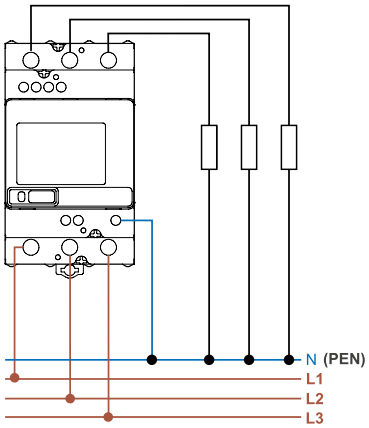

Type 7M.38.8.400.0112

Single-phase system

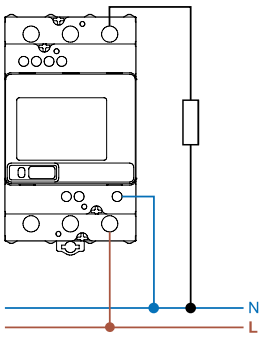

Type 7M.38.8.400.0112

Modbus or M-Bus system

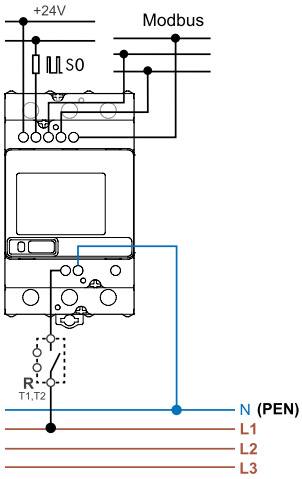

Type 7M.38.8.400.0212

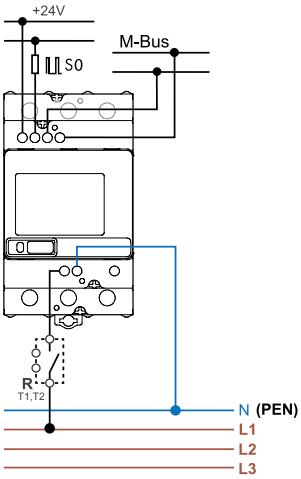

Type 7M.38.8.400.0312

E

Two programming modes for energy meters with NFC technology

"Smart"

Smart mode via smartphones with NFC communication using Finder toolbox NFC, iOS or Android App.

"Classic"

Classic mode via touch button to scroll and read the meter

Android, Google Play and the Google Play logo are trademarks of Google Inc.
Apple is a trademark of Apple Inc. App Store is a service mark of Apple Inc.

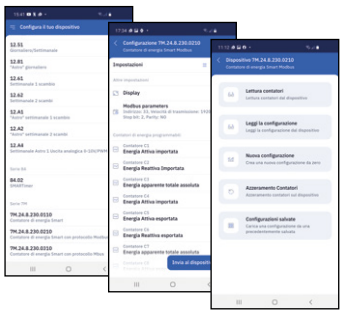

E

Finder Toolbox NFC App for programming
Once the FINDER Toolbox NFC App is downloaded and installed, you can easly program your device thanks NFC technology. One of the main features is that even in the absence of the power supply network, it is possible to read an energy counter, read the existing configuration, change the communication protocol parameters, or save and share the settings.

All that is required for the transfer of data is to simply touch the device with the smartphone.

Finder Toolbox for information
Finder Toolbox can provide you with all the latest technical data sheets and news from Finder.

Example using the NFC Toolbox APP

Reading Counters

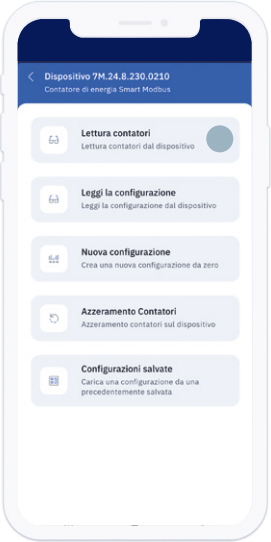

If you want to read all the energy counters select "**Read Counters**"

Even in the absence of the power supply network all the measurements made are readable thanks to the App - not just MID values.

Modbus parameter settings

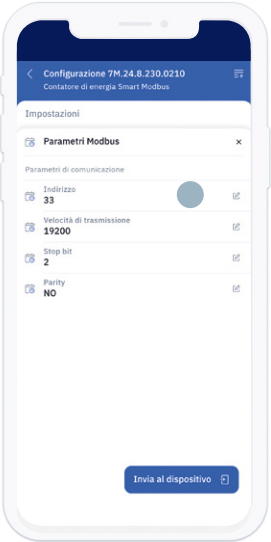

Select "**Address**" in order to change default values

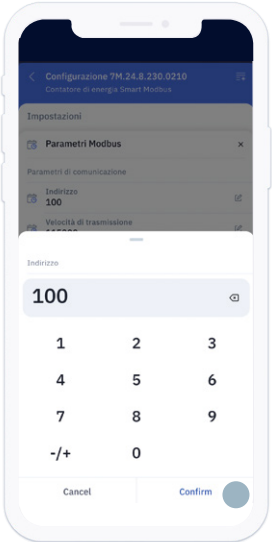

write the new address:**100**.
Click "**Confirm**"

Saved configuration

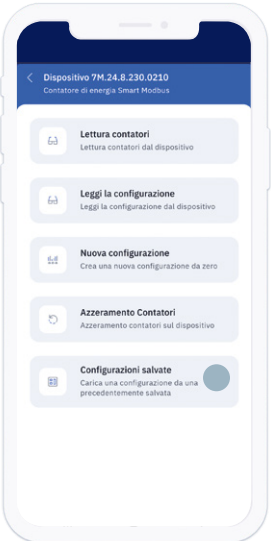

Recall the stored configuration

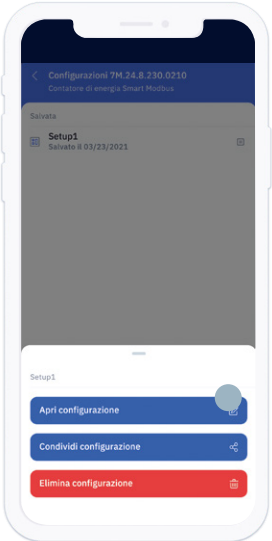

Outline drawings

Type 7M.24.8.230.0001
Box clamp

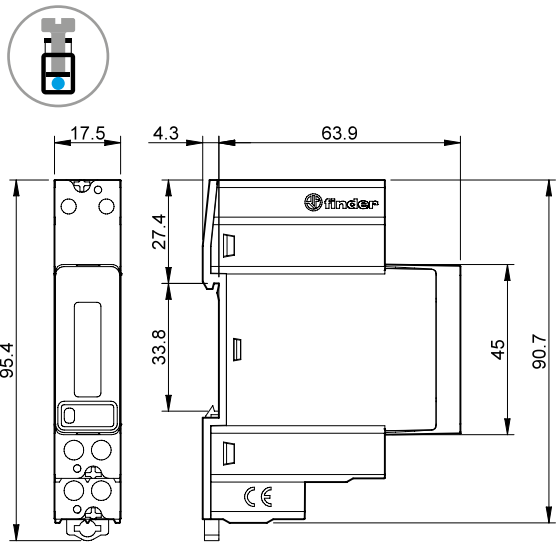

Type 7M.24.8.230.0010
Box clamp

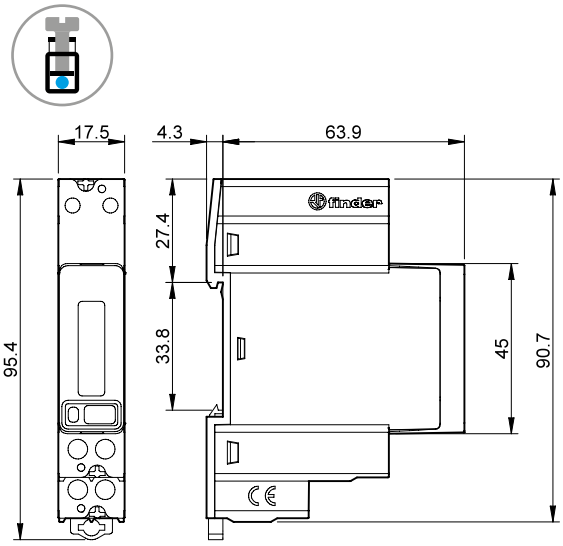

Type 7M.24.8.230.0110
Box clamp

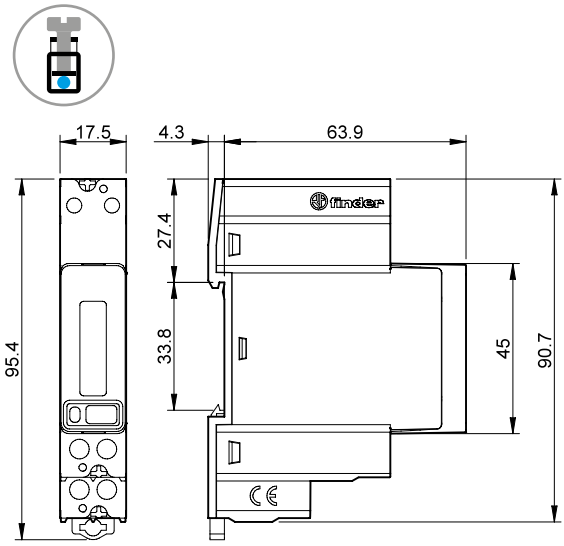

Type 7M.24.8.230.0210
Box clamp

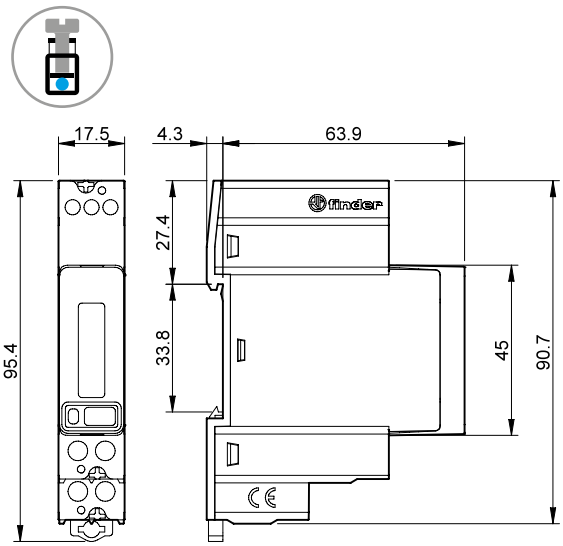

Type 7M.24.8.230.0310
Box clamp

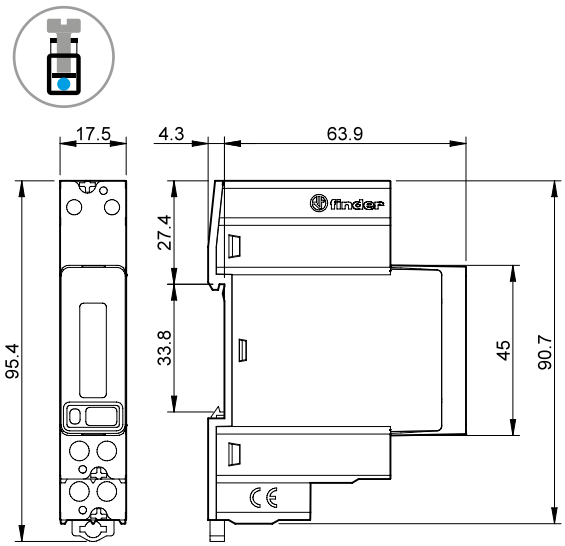

Outline drawings

Type 7M.38.8.400.0112
Box clamp

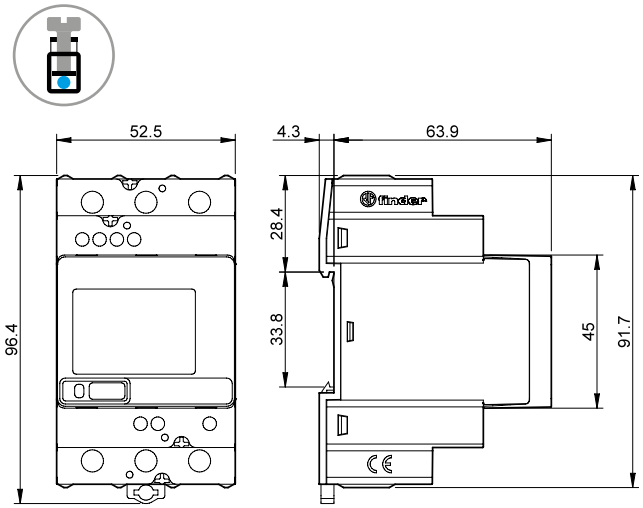

Type 7M.38.8.400.0212
Box clamp

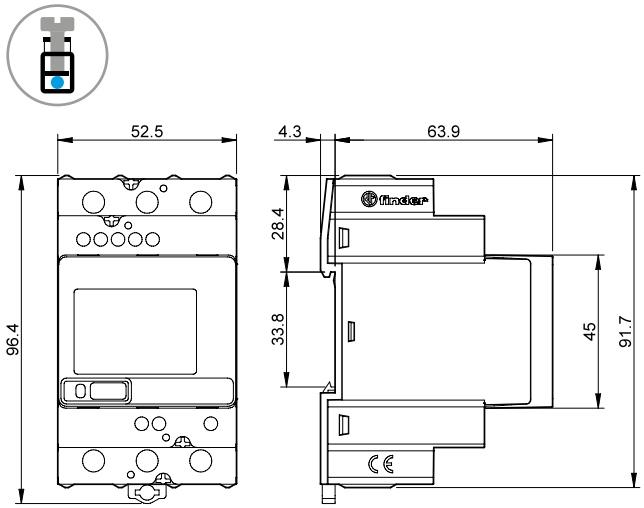

Type 7M.38.8.400.0312
Box clamp

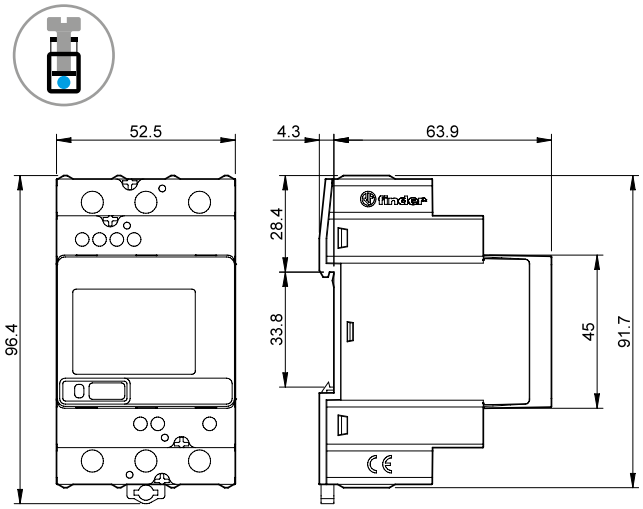

E